SAMSUNG CONFIDENTIAL
THIS DOCUMENT CONTAINS CONFIDENTIAL PROPRIETARY INFORMATION THAT IS SAMSUNG ELECTRONICS CO'S PROPERTY. DO NOT DISCLOSE TO OR DUPLICATE FOR OTHERS EXCEPT AS AUTHORIZED BY SAMSUNG.

MAIN ANTENNA (LB,MB)

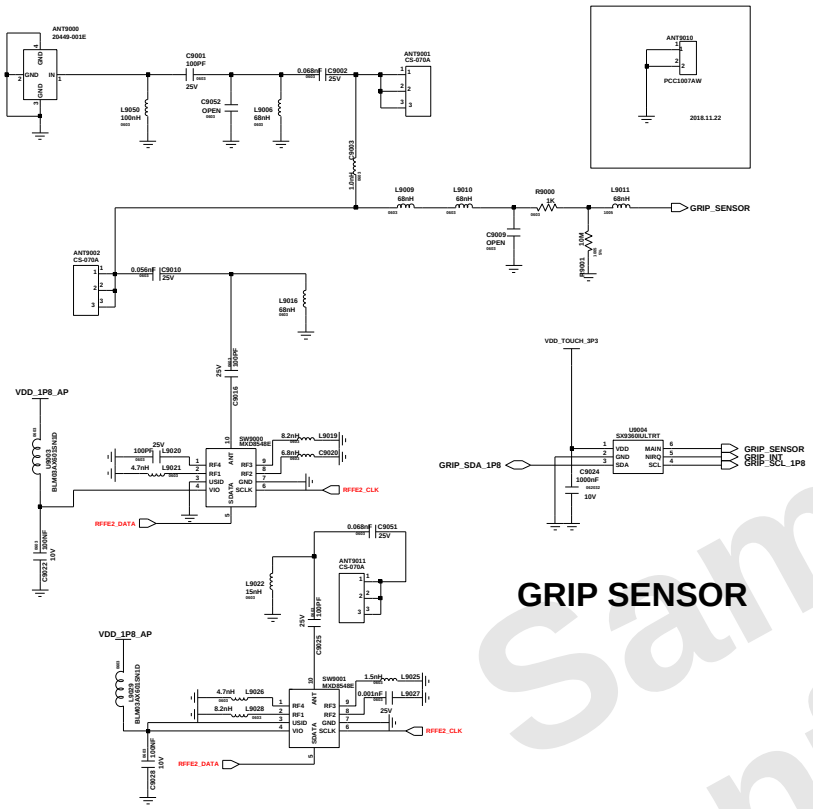

GRIP SENSOR

EARJACK CON

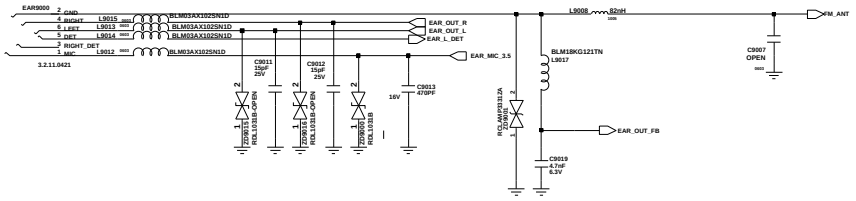

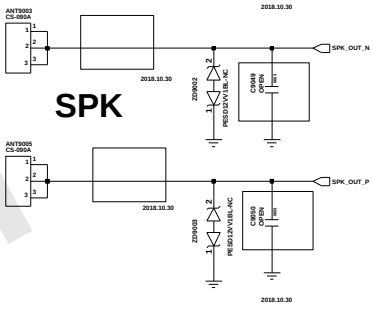

SPK

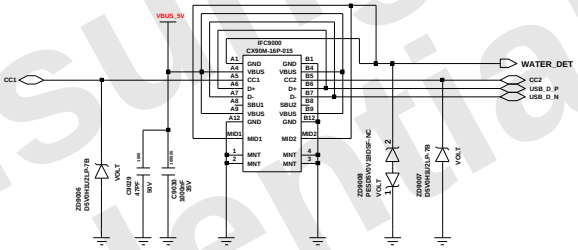

IF CON (TYPE-C)

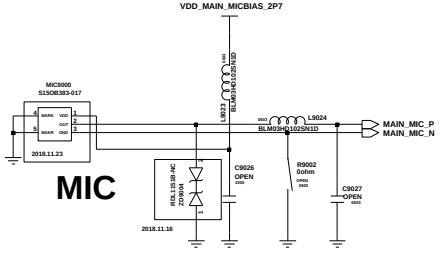

MIC

MAIN FPCB

	SUB_REV1	SUB_REV2
F/FN/GN/G (R9016 0ohm)	0	0
GT (R9017 0ohm)	0	1
U (NA) (R9018 0ohm)	1	0
N (KOR) (R9019 0ohm)	1	1

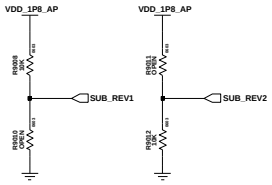

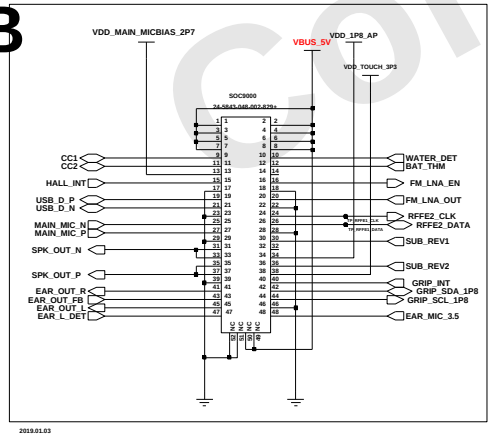

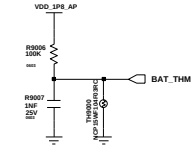

BAT_THM

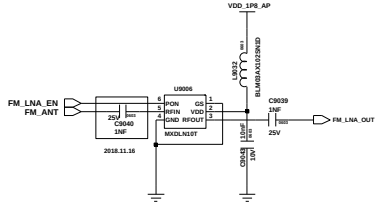

FM LNA

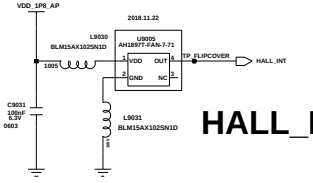

HALL_IC

INSICK100 INSICK102
INSICK101 INSICK103

Changed by: user89	Date Changed: Thursday, June 11, 2015	Time Changed: 8:11:03 pm	QA CHK:

Engineer: user89
Drawn by: user89
R&D CHK:
DOC CTRL CHK:
MFG ENGR CHK:

SAMSUNG ELECTRONICS

TITLE: 12 1 8 A
Size: A2
SM-A205U_SUB_PBA_REV0.1A
REV
Drawing Number:
Page: 1

Samsung Confidential

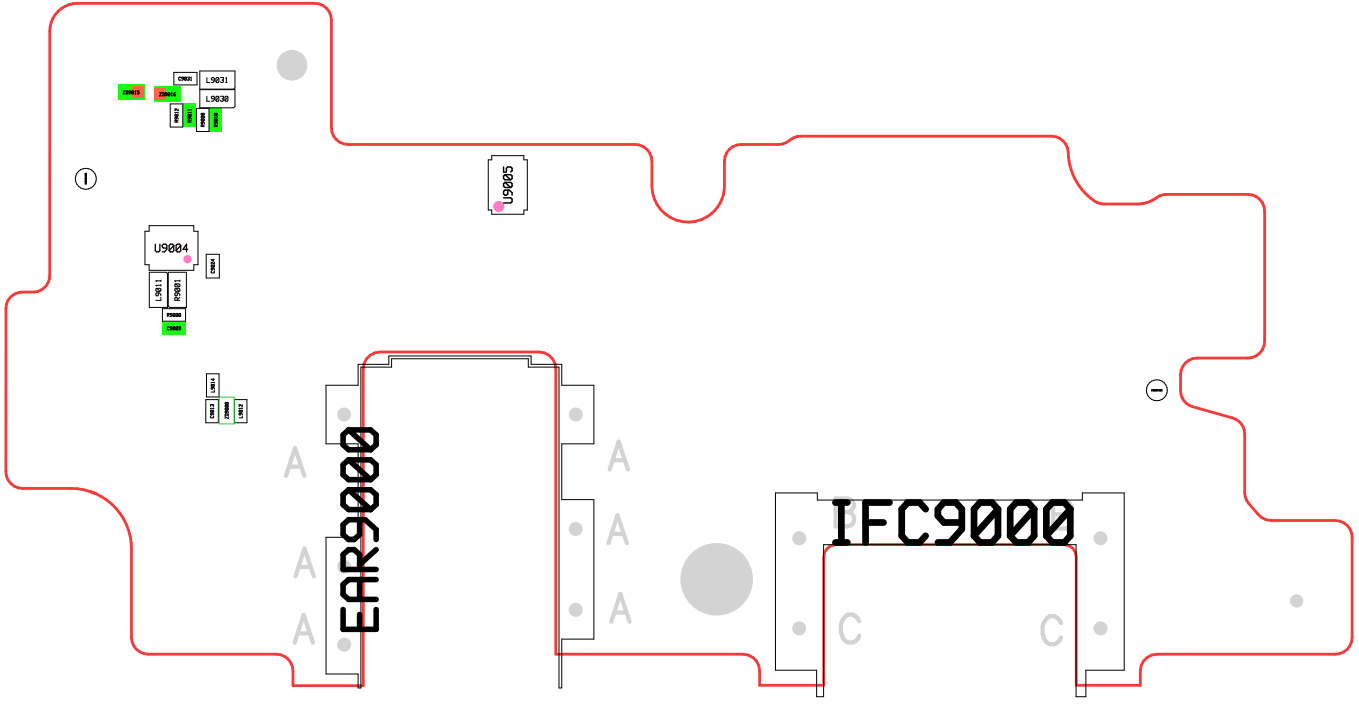
U9005
U9004
EAR9000
IFC9000

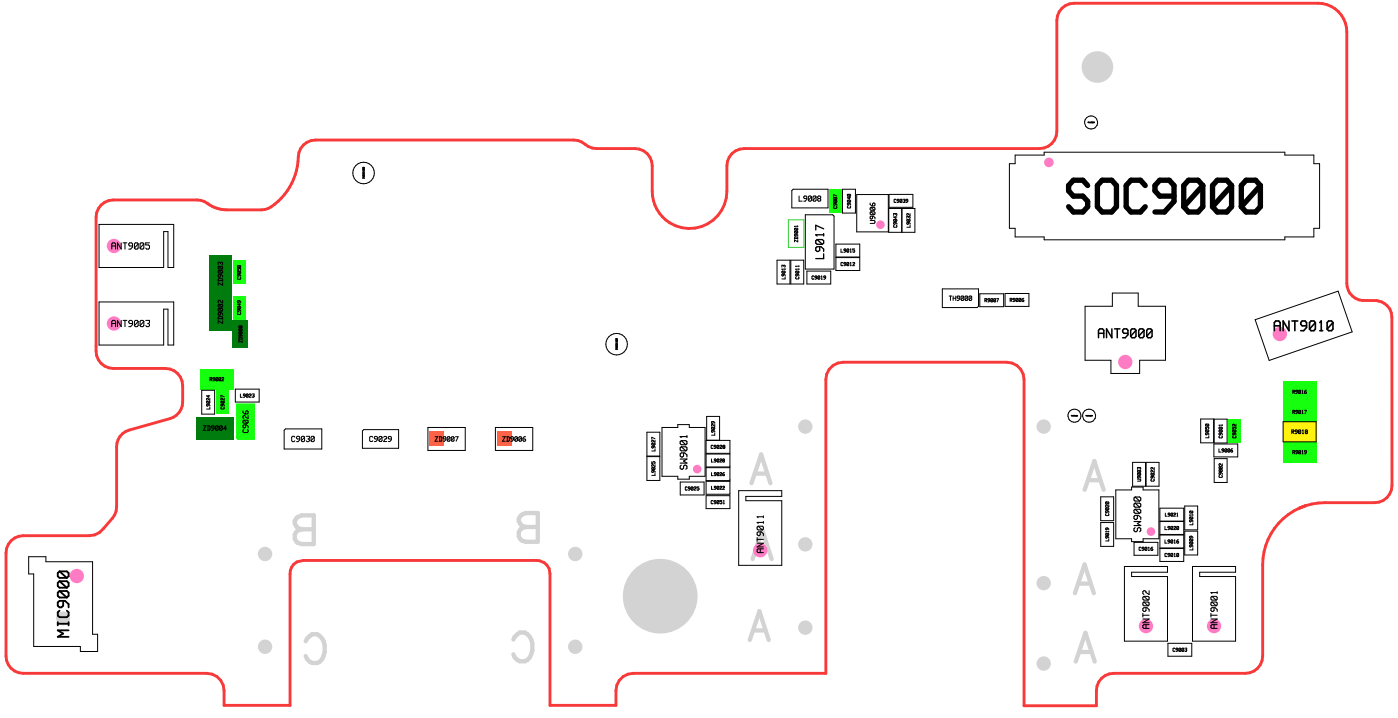
SOC9000
ANT9005
ANT9003
ZD9003
ZD9002
R9003
R9002
R9007
L9029
L9031
R9001
ZD9004
C9035
C9030
C9029
ZD9007
ZD9006
MIC9000
L9008
R9008
C9040
C9020
L9020
C9021
C9022
L9017
ZD9002
L9015
C9012
L9013
C9011
C9019
TH9000
R9007
ZD9006
ANT9000
ANT9010
R9016
R9017
R9018
R9019
SK9001
L9007
L9005
L9008
C9028
L9030
L9026
L9022
C9025
C9051
ANT9011
L9008
L9009
L9006
L9008
C9002
C9002
C9008
L9019
SK9000
L9021
L9020
L9016
L9018
L9008
C9014
C9018
ANT9002
ANT9001
C9002